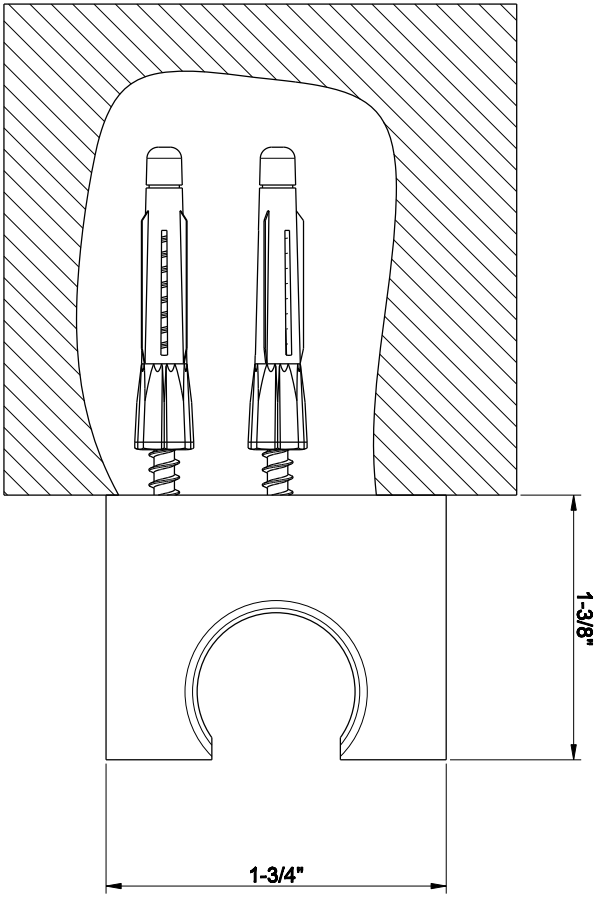
1-3/8"
1-3/4"

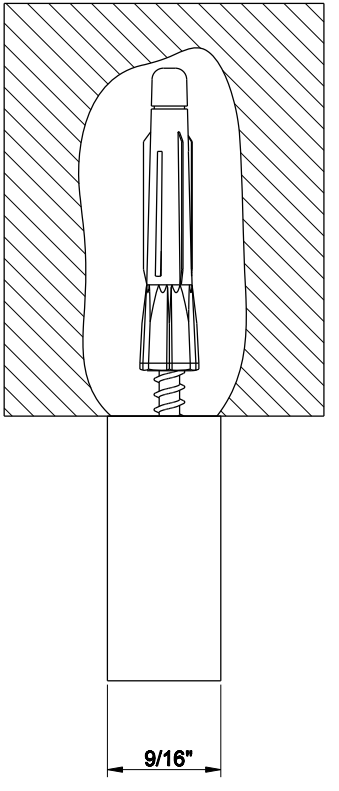
9/16"